STEP 5

Tighten all hardware in this order:

1) Tighten all 906R center section hardware to 80 ft. lbs.
2) Check to ensure that the hitch is square by measuring the space between the front cross member of the hitch and the bed cross member so that the space is equal on each side of the truck.
3) Tighten the gold U-bolts to 60ft. lbs.
4) Tighten the 5/8” X 7 ½” hex cap screws to 60 ft. lbs.
5) Tighten the hardware that holds the side plates to the cross members to 80 ft. lbs.

STEP 6

Install the latch pin handle by inserting the handgrip end of the latch pin handle from inside the center section through the slot in the endplate. Align the latch pin handle loop and the hole in the tab on the end of the latch pin assembly, putting the latch pin handle loop on the pickup cab side of the tab and bolt together using the 3/8” x 3/4” hex cap screw and center lock nut. Before tightening make certain the latching handle is resting in the lower portion of the slot in the endplate. This will ensure adequate clearance between the sheet metal flange and the frame rail. When properly attached, the center of the latch pin handle should be in line with the center of the latch pin assembly.

STEP 7

To install the safety chain U-bolts it is necessary to drill four 1/2” holes through the truck bed floor. Drill the holes from beneath the truck, through the four holes located in the 906R center section. Drop a U-bolt through each pair of holes from the top side of the truck bed floor. Place a taperd spring and center lock nut on each of the four legs. Tighten the center lock nuts until flush with the bottom of the U-Bolts.

Copyright 2005-2007
B&W Custom Truck Beds, Inc.
ALL RIGHTS RESERVED

UNITED STATES PATENT No. 5016898

1306R 12 19 2007

B&W Trailer Hitches
1216 HWY 224 / PO Box 186
Humboldt, KS 66748
620.473.3664
800.248.6564
Fax:620.473.3766

NOTE: ***We recommend reading instructions before beginning the installation.***

Turnover Ball™ Gooseneck Hitch Installation Instructions

Model 1306R

Call or Email us for Installation Support

hitches@turnoverball.com
www.turnoverball.com

Dodge 2003-2008
¾, & 1 Ton Long & Short Bed
Two & Four-Wheel Drive *And*
½, ¾, & 1 Ton Mega Cab Short Bed

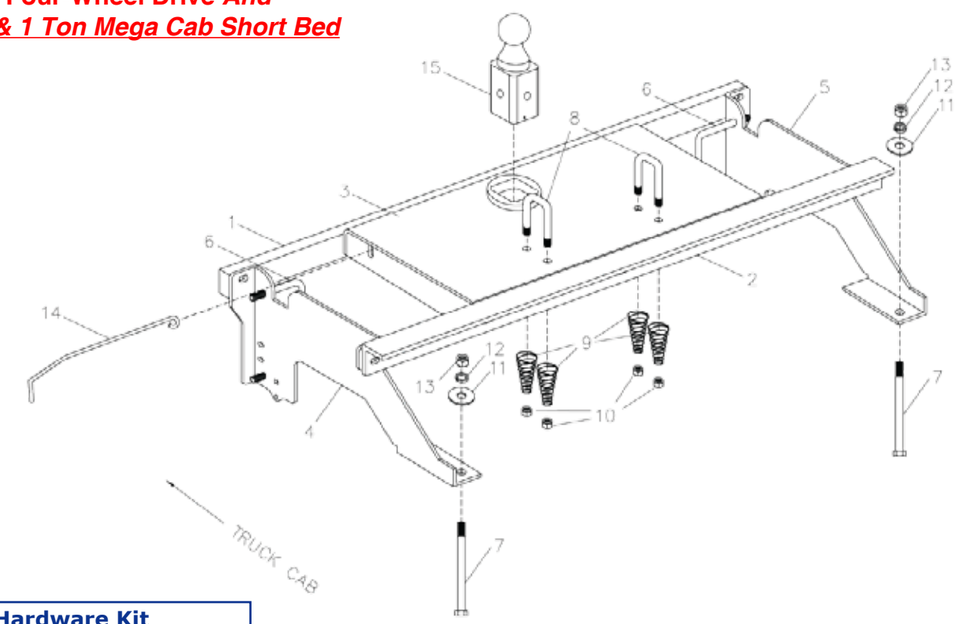

Hardware Kit

11 - ½” X 1 ½” hex cap screw
9 - ½” hex finish nut
15 - ½” split lock washer
11 - ½” flat washer
2 - 4” X 6 ½” gold U-bolt
2 - 5/8” X 7 ½” hex cap screw
2 - 5/8” hex finish nut
2 - 5/8” split lock washer
4 - 5/8” flat washer
1 - 5/16” X 1” carriage bolt
1- 5/16” flange nut

Safety Chain Kit

2 - ½” U-bolt
4 - ½” lock nut
4 - spring
1 - 3/8” x ¾” hex cap screw
1 - 3/8” lock nut

Parts List

1- Front Cross Member
2- Rear Cross Member
3 - 906R center Section
4 - Left Side plate
5 - Right Side Plate
6 - 4” X 6 ½” Gold U-bolt
7 - 5/8” X 7 ½” Hex Cap Screw
8 - ½” X 1 ½” X 3 1/8” Silver U-bolt
9 - Tapered Spring
10 - ½” Center Lock Nut
11 - 5/8” Flat Washer
12 - 5/8” Split Lock Washer
13 - 5/8” Hex Finish Nut
14 - Latch Pin Handle
15 - Turnover Ball

BEFORE INSTALLING

OVERHEAD LIFTING DEVICE

An overhead-lifting device, such as chain falls, engine hoist, or cable come-a-long, can be used to lift the center section of the hitch in place. Lower a loop of rope or chain through the 4" hole in the truck bed floor and attach it to the latch pin in the round hitch receiver tube in the center section. Use the lifting device to raise the center section until the round hitch receiver tube that protrudes from the center section fits in the 4" hole in the truck bed floor. Maintaining upward pressure may facilitate fastening the crossmember to the center section, especially if the truck bed floor has been distorted downward from heavy use. If you use an overhead-lifting device, it should be disconnected before squaring the center section across the frame, installing the sideplates and torquing fasteners.

WARNING

Most trucks have FUEL LINES and/or BRAKE LINES and/or ELECTRICAL WIRES located along the frame rails where B&W Turnover Ball hitches install. Carefully examine the location of fuel lines, brake lines and electrical wires BEFORE INSTALLATION. Be certain you will not damage fuel lines, brake lines or electrical wires when positioning hitch components, drilling holes, tightening fasteners, and lifting and lowering the truck bed. The fuel tank vent, located on top of the gas tank, can be easily damaged during the installation of the hitch components. Care must be taken when positioning the front crossmember and center section components.

WARNING

On the short bed trucks, BEFORE INSTALLING THIS HITCH, check for adequate turning clearance between the front of all of your trailers and the truck cab.

WARNING

DO not invert the ball in the socket when carrying heavy loads on 2 wheel drive trucks. The ball may hit the top of the differential. Remove the ball from the socket before loading. A plug for the socket is available from B & W.

GENERAL INFORMATION

The 2003 Dodge 2500 and 3500 long and short bed truck has a tubular frame, instead of the traditional "C" shaped channel frame. The Turnover Ball gooseneck hitch for this truck clamps to the frame and installation is accomplished without any welding, drilling, or modification of the truck frame.

INSTALLATION INSTRUCTIONS

STEP 1A:

Begin by marking the location for the hole in the truck bed floor. Measure from the back end (tail gate end) of the truck bed floor by hooking a tape measure over the back of the truck box and mark the floor at the correct location. Next, mark the center between the wheel wells. This will be the center point for the 4" hole. This location is critical to the correct installation of this hitch, so measure, mark, and saw carefully.

BALL LOCATION:

SHORT BED INSTALLATION 45 ½"

LONG BED INSTALLATION 47 ½"

STEP 1B:

If the truck has a plastic bed liner, you may drill through both, but it is more difficult to accurately locate the midpoint between the wheel wells, and to be sure that the bed liner does not move while sawing the hole. Make a 4 inch hole at this location using a four inch hole saw, or by marking a 4 inch circle and cutting it out with a saber saw equipped with a metal cutting blade.

STEP 2

Install the two cross members. They will be installed by sliding them from inside the wheel well, above the tire, through the gap between the bed and the truck's frame and across until they span the frame rails. The gap between the bed and frame is large enough to allow this, but the gap is partially obstructed by a sheet metal flange (about 1 inch in height) that is hanging down from the bottom of the truck bed floor. A small notch needs to be made in this flange on the **Passenger's** side of the truck. Locate the 7/16" hole in this flange above the axle and enlarge the hole by removing the metal below the hole so that a notch is created. This will allow the rear cross member to be installed.

Install the front cross member making sure that the two outer holes will be toward the top of the cross member when it is turned up vertical. Slide the cross member forward to the bed cross member. Using the notch for clearance install the rear cross member with the angle oriented so that the leg with the slotted holes facing the front of the truck and the horizontal leg will be up against the truck bed floor. Hold the rear cross member in an inverted V position, and push the angle across the frame. Slide the rear cross member to the rear against the bed cross member. Then rotate the cross member so that the leg with the slotted holes is vertical.

STEP 3

Install the 906R center section with the latch pin on the driver's side and the socket offset to the front of the truck. Raise the center section over the differential while sliding the center section over the exhaust and guiding the socket top into the 4" hole in the truck bed floor. Move rear cross member forward against the center section. Place a ½" flat washer on a ½" X 1 ½" hex cap screw insert through the rear cross member and center section, securing it with a ½" lock washer, ½" finish nut. With a ½" lock washer and ½" flat washer on a ½" X 1 ½" hex cap screw thread into the front cross member from inside the center section. **(DO NOT TIGHTEN AT THIS TIME)**

STEP 4

The emergency brake cable bracket may need to be removed to install the side plate on the driver's side. In this case the frame may have a similar set of holes forward of the bracket that it can be relocated. If no holes are available for relocation of the brake cable bracket a 5/16" X 1" carriage bolt is provided. Place in the square hole at the lower part of the side plate. Insert the carriage bolt through the side plate with the threads facing out. Place the brake cable bracket over the carriage bolt and secure with a 5/16" flange nut.

The side plates will have to be installed with the center section bolts still loose, so that the side plates can be positioned between the front and rear cross members. Place a ½" X 1 ½" hex cap screw, ½" split lock washer, and ½" flat washer through the side plate into the front cross member. With a ½" flat washer on a ½" X 1 ½" hex cap screw insert through the rear cross member and side plate, securing it with a ½" lock washer, ½" finish nut.

Next install the gold colored U-bolts from inside the frame through the holes in the sideplate above and below the frame. To install the gold colored U-bolt on the driver's side it is necessary to remove a wiring harness frame clip (see fig. 3), place the U-bolt against the frame staying under the wiring harness, and brake line. While making certain that nothing is between the frame and U-bolt, raise the U-bolt until the top leg is level with the top of the frame rail. Then turn the legs toward to the sideplate fitting the legs into the holes in the sideplate above and below the frame. Replace the wiring harness frame clip and fasten the U-bolt, using ½" lock washer and ½" finish nut on each end of the U-bolt.

Insert the 5/8" X 7 ½" hex cap screw through the hole in the side plate that wraps underneath the frame. Push the hex cap screw completely through the frame and secure with a 5/8" flat washer, 5/8" lock washer, and 5/8" hex finish nut. When installing the 5/8" X 7 ½" hex cap screw on the passenger side the exhaust may need to be pulled to the side to allow the cap screw to pass by.