B&W Trailer Hitches
1216 Hwy 224 / PO Box 186
Humboldt, KS 66748
800.248.6564
620.473.3664
Fax:620.473.3766
hitches@turnoverball.com
www.turnoverball.com

Turnover Ball™ Gooseneck Hitch Installation Instructions

Model 1300R

Call or E-mail for installation support

Dodge (1973-1993)

1/2 - 3/4 - 1 Ton Trucks

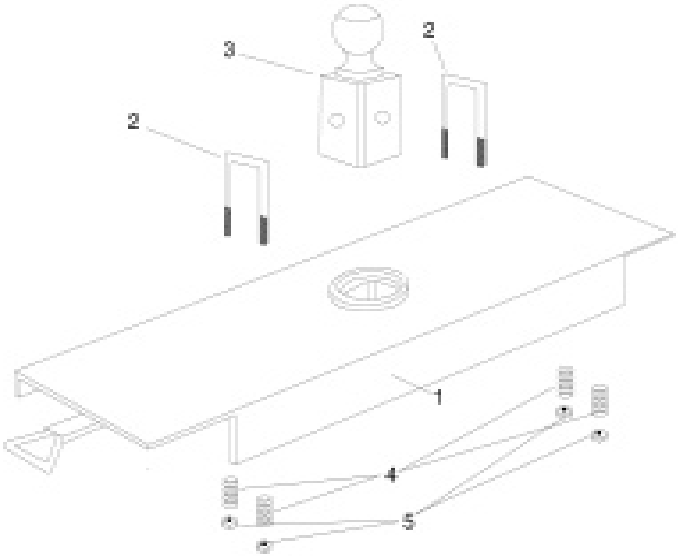

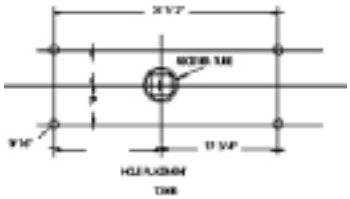

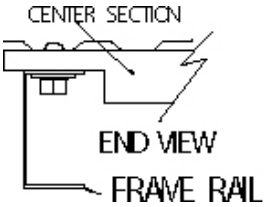

Hardware Kit

2 - 1/2" x 1 1/2" Carriage bolts
2 - 1/2" x 2 1/2" Carriage bolts
4 - 1/2" flat washers
4 - 1/2" lock washers
4 - 1/2" nuts

Safety Chain Kit

2 - 1/2" U-bolts
4 - 1/2" lock nuts
4 - springs
1 - 3/8"x3/4" Bolt
1 - 3/8" Lock nut

Parts List

1 - 1300R Center Section
2 - Safety Chain U-Bolts
3 - Turnover Ball
4 - Springs
5 - 1/2" Lock Nuts

BEFORE INSTALLING

OVERHEAD LIFTING DEVICE

An overhead-lifting device, such as chain falls, engine hoist, or cable come-a-long, can be used to lift the center section of the hitch in place. Lower a loop of rope or chain through the 4" hole in the truck bed floor and attach it to the latch pin in the round hitch receiver tube in the center section. Use the lifting device to raise the center section until the round hitch receiver tube that protrudes from the center section fits in the 4" hole in the truck bed floor. Maintaining upward pressure may facilitate fastening the crossmember to the center section, especially if the truck bed floor has been distorted downward from heavy use. If you use an overhead-lifting device, it should be disconnected before squaring the center section across the frame, installing the sideplates and torquing fasteners.

WARNING

Most trucks have FUEL LINES and/or BRAKE LINES and/or ELECTRICAL WIRES located along the frame rails where B&W Turnover Ball hitches install. Carefully examine the location of fuel lines, brake lines and electrical wires BEFORE INSTALLATION. Be certain you will not damage fuel lines, brake lines or electrical wires when positioning hitch components, drilling holes, tightening fasteners, and lifting and lowering the truck bed. The fuel tank vent, located on top of the gas tank, can be easily damaged during the installation of the hitch components. Care must be taken when positioning the front crossmember and center section components.

Warning

On Short bed trucks, BEFORE INSTALLING THIS HITCH, check for adequate turning clearance between the front of all of your trailers and the truck cab.

Warning

DO NOT invert the ball in the socket when carrying heavy loads on 2 wheel drive trucks. The ball may hit the top of the differential. Remove the ball from the socket before loading. A plug for the socket is available from B & W.

INSTALLATION

STEP ONE

Begin by marking the location for the hole in the truck bed floor. Measure from the back end (tail gate end) of the truck bed floor by hooking a tape measure over the back of the truck box ***(not including the tail gate)*** and mark the floor at the correct location. Next mark the center between the wheel wells. This will be the center point for the 4" hole. This location is critical to the correct installation of the hitch, so measure, mark and saw carefully.

LONG BED LOCATION 48 1/2"
SHORT BED LOCATION 43 1/2"

STEP TWO

Loosen, but do not remove, the passenger's side bed bolts. Remove all remaining bed bolts. (Loosen or remove running board or other equipment fasteners that would prevent lifting the truck bed off the frame.) Raise the driver's side of the truck bed approximately 4" by jacking against the truck bed floor in front of the wheel well. (Be cautious of fuel filler hoses and electrical wiring.)

STEP THREE

With the latch pin mechanism on the driver's side, position the hitch receiver assembly (1) across the top of the frame rails. Slowly lower the truck bed, aligning the hitch receiver tube (2) that protrudes from the hitch receiver assembly to fit through the round 4" hole in the truck bed floor. Replace the bed bolts. Square the hitch receiver assembly across the frame. Check truck bed alignment with the cab, and tighten the bed bolts.

STEP FOUR

Fastening the hitch receiver assembly to the truck frame requires drilling four 9/16" holes through the truck bed floor; hitch receiver assembly and truck frame rails. To locate the holes, mark a line, squared across the truck bed floor, through the center of the round hitch receiver tube. Mark the location on the line 17¾"from the center of the round hitch receiver tube on each side. (If these locations are in a raised corrugation in the truck bed floor, insert a metal shim of the correct thickness between the hitch receiver assembly and the truck bed floor in the raised corrugation.) Mark a hole location 3" above the line and 3" below the line at these locations. Verify that these locations are near the center of the frame rails, and carefully examine fuel lines, brake lines, and electrical wiring to assure adequate clearance. Mark, DOUBLE CHECK and center punch these hole locations. To maintain proper alignment use the following procedure, one hole at a time: First, drill a ¼" pilot hole, then drill a 9/16" hole through the pilot hole, and drop the bolt in the hole. When all holes have been drilled, use a flat washer, lock washer and tighten a nut on each bolt. Seat the square bolt shank of the bolts with several sharp hammer blows to the bolt heads. Finally, torque the fasteners to 90 ft. lbs.

STEP FIVE

To install the safety chain brackets (3) it is necessary to drill four ½" holes through the truck bed floor and the hitch receiver assembly. To locate the center of the saftey chain holes measure out 10 1/2" each way from the center of the round hitch receiver tube. Measure toward the rear of the truck from the center of the receiver socket at the 10 1/2" mark 1" and 3" to find the centers of the four 1/2" holes to be drilled. These marks are on 2" centers and should be in a low rib of the truck bed floor. Center punch these hole locations and drill ¼" pilot holes through the truck bed floor and hitch receiver assembly. Complete by drilling ½" holes through the pilot holes. Drop a safety chain bracket (U-bolt) through each pair of holes from the topside of the truck bed floor. Place a spring and lock nut on each of the four legs. Tighten the lock nuts until ¼" of threads extends through the lock nut.

STEP SIX

Retract the latch pin by pulling the handle all the way out and sliding it to the left. Place the turnover ball (4) in the hitch receiver. Engage the latch pin by moving the handle to the right and in. Be certain the latch pin passes through the hole and the turnover ball and fully engages through the hitch receiver. Repeat this process with the turnover ball in all eight positions. Grease the square base of the turnover ball.

Copyright 2002
B&W Custom Truck Beds, Inc.
ALL RIGHTS RESERVED