Next attach the rear bar to the side plate flange threading a ½" by 1 ½" bolt into the bar and tighten both the front and rear flanges at this time to 80 ft pounds.

Install the ½-inch x 8 ¼-inch U-bolt from inside the frame through the holes in the sideplate above and below the frame, use a lock washer and nut on each end of the U-bolt. Repeat this procedure on the passenger side of the truck with the other sideplate.

Install the ¾-inch by 2 ½-inch bolt through the lower rear hole in the sideplate. The hole in the frame is a slotted hole, and B&W provides an insert for the slotted frame hole to convert it to a ¾" round hole. This insert is installed to the inside of the truck frame, and it can be positioned in **three** different positions; the center position is on one side of the insert, and the offset position is on the other side, and can be offset either forward or rear ward. Look at the position of the sideplate hole relative to the frame slot to select the appropriate position for the frame insert. Install the insert over the ¾-inch bolt and into the frame, and install the flat washer, lock washer, and nut.

When completed, Make certain the hitch is square with the frame. Tighten remaining hard ware in this order: Tighten the ¾" side plate bolts to 120 ft pounds. Tighten the frame clamping U-bolts slowly, alternating between the top and bottom legs of the U-bolt until equally tightened to 60 ft pounds. 5. Tighten the two carriage bolts to 80 ft pounds.

STEP SEVEN *- INSTALL LATCH PIN RELEASE HANDLE*

Install the latch pin release handle (9) by inserting the handgrip end of the handle rod from inside the center section through the hole in the endplate. Align the handle loop and the hole in the tab on the end of the latch pin assembly, putting the handle loop on the right side of the tab and bolt together using the 3/8" x 3/4" bolt and lock nut. When properly attached, the center of the handle should be in line with the center of the pin assembly, and the bolt head should be on the loop side, and the nut on the tab side. Tighten the bolt.

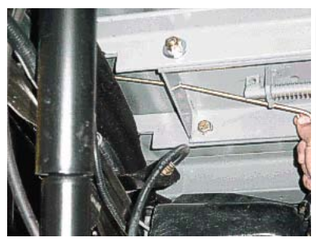

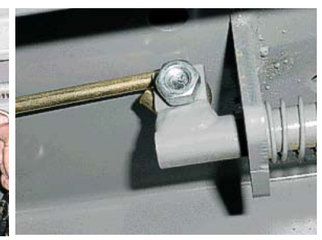

STEP EIGHT *- INSTALL SAFETY CHAIN BRACKETS*

To install the safety chain brackets (8) it is necessary to drill four 1/2" holes through the truck bed floor. Drill the holes from beneath the truck, through the two holes located on each side of the round receiver tube in the center section. This will locate the safety chain brackets (8) in the lowest point of the floor corrugation. Drop a U-bolt through each pair of holes from the topside of the truck bed floor. Place a spring and lock nut on each of the four legs. Tighten the lock nuts until flush with the bottom of the U-bolts.

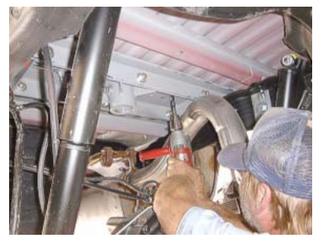

STEP NINE - *ENGAGE LATCH PIN*

Retract the latch pin by pulling the handle all the way out until it stops and then rotating it clockwise. Place the Turnover Ball (10) in the hitch receiver. Engage the latch pin by rotating the handle counter clockwise. Be certain the latch pin passes through the holes in the Turnover Ball and fully engages through the hitch receiver. Finally, remove and lightly grease the four corners on the square base of the Turnover

Copyright 2002-2007-2008
B&W Custom Truck Beds, Inc.
ALL RIGHTS RESERVED

UNITED STATES PATENT No. 5016898

B&W Trailer Hitches
1216 HWY 224 / PO Box 186
Humboldt, KS 66748
800.248.6564
620.473.3664
Fax:620.473.3766

hitches@turnoverball.com
www.turnoverball.com

NOTE: ***We recommend reading instructions before beginning the installation.***

Turnover Ball™ Gooseneck Hitch Installation Instructions

Model 1062R

Call or Email us for Installation Support

Chevy-GMC (2001-2006)
1-Ton HD (Heavy Duty) Series
3500 Single and Dual Wheel

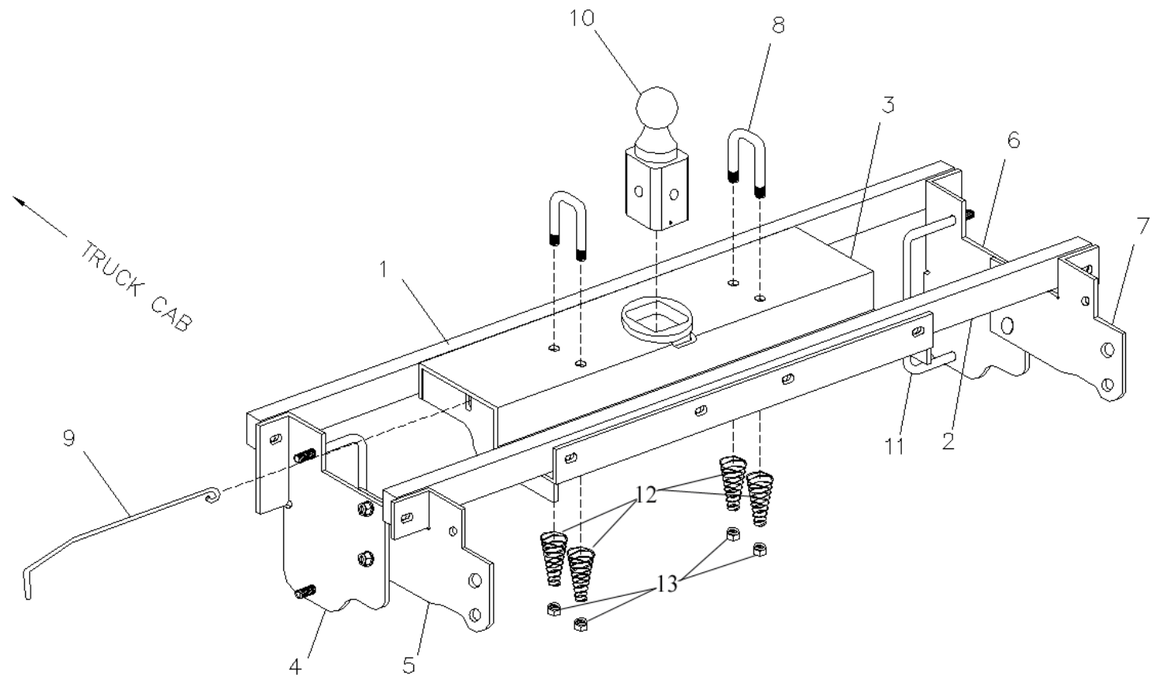

Parts List

1) Front Crossmember
2) Rear Crossmember
3) Center Section
4) Left Front Sideplate
5) Left Rear Sideplate
6) Right Front Sideplate
7) Right Rear Sideplate
8) 2 1/2" x 3 1/8" U-bolts
9) Latch Pin Handle
10) Turnover Ball
11) 2-4 1/4" X 8 1/4" U-Bolts
12) Tapered Springs
13) Center Lock Nut

****All Hardware is packaged in the 962R box**

Hardware Kit
1062-1-R1010
1062 Bolt Bag

6 - 1/2" x 1 1/2" bolts
4 - 1/2" x 2 1/4" bolts
4 - 1/2" x 1 1/4" Carriage bolts
13 - 1/2" Hex nuts
19 - 1/2" Lock washers
11 - 1/2" Flat washers
2 - 3/4" x 2 1/2" bolts
2 - 3/4" Hex finish nuts
2 - 3/4" Lock washers
2 - Bushing Blocks

1900-2-1600
Safety Chain Kit

2 - 1 1/2" x 3 1/8" U-bolts
4 - Springs
4 - 1/2" Lock nuts
1 - 3/8" x 3/4" Bolt
1 - 3/8" Lock nut

BEFORE INSTALLING

OVERHEAD LIFTING DEVICE

An overhead-lifting device, such as chain falls, engine hoist, or cable come-a-long, can be used to lift the center section of the hitch in place. Lower a loop of rope or chain through the 4” hole in the truck bed floor and attach it to the latch pin in the round hitch receiver tube in the center section. Use the lifting device to raise the center section until the round hitch receiver tube that protrudes from the center section fits in the 4” hole in the truck bed floor. Maintaining upward pressure may facilitate fastening the crossmember to the center section, especially if the truck bed floor has been distorted downward from heavy use. If you use an overhead-lifting device, it should be disconnected before squaring the center section across the frame, installing the sideplates and torquing fasteners.

WARNING

Most trucks have FUEL LINES and/or BRAKE LINES and/or ELECTRICAL WIRES located along the frame rails where B&W Turnover Ball hitches install. Carefully examine the location of fuel lines, brake lines and electrical wires BEFORE INSTALLATION. Be certain you will not damage fuel lines, brake lines or electrical wires when positioning hitch components, drilling holes, tightening fasteners, and lifting and lowering the truck bed. The fuel tank vent, located on top of the gas tank, can be easily damaged during the installation of the hitch components. Care must be taken when positioning the front crossmember and center section components. We recommend removing the bed bolts on the driver’s side and lifting the bed to give you more clearance during installation of the hitch parts under the bed floor.

INSTALLATION INSTRUCTIONS

***STEP ONE** - REMOVE SPARE TIRE AND HEAT SHIELD*

The heat shield under the bed floor must either be removed or a section cut out for the hitch assembly to be installed.

A) Remove the heat shield from in front of the back crossmember.

B) Remove the heat shield from the back of the crossmember located near the front of the wheel well.

***STEP TWO** - REMOVE EXHAUST BRACKET*

To ease installation of the center section it is necessary to remove the lower exhaust bracket. Simply pull the hanger rod out of the rubber bracket hole, a 6” to 8” wood block can then be positioned between the exhaust pipe and frame of the truck. This will increase your clearance between the top of the exhaust pipe and the bottom of the truck bed floor. (**Caution**: Exhaust pipe may be hot).

***STEP THREE -** MARKING AND CUTTING 4 INCH HOLE IN TRUCK BED*

Begin by verifying and measuring the correct hole location in the truck bed floor.

Truck Type: Long bed single & dual wheeled 1 Ton.
Ball Location: 49 1/2” from the back of the bed.

Measure from the back end (tail gate end) of the truck bed floor by hooking a tape measure over the back of the sheet metal and marking the floor at the correct measurement. Center the measurement between the fender wheel wells. This location is critical to the correct installation of this hitch, so measure, mark and saw carefully. If the truck has a plastic bed liner, you may drill through both, but it is more difficult to accurately locate the midpoint between the fender wheel wells, and to be sure that the bed liner does not move while sawing the hole. Make a 4 inch hole at this location using a four inch hole saw, or by marking a 4 inch circle and cutting it out with a saber saw equipped with a metal cutting blade.

***STEP FOUR** - INSTALL CROSSMEMBERS*

The next step is to install the two crossmembers. They install through the gap between the bed and the frame. The front crossmember can be identified by having a bolt pressed into one hole. Install the front bar by sliding it across the frame rails between the two bed cross members where the four inch hole has been cut. Slide the bar in and center between the frame rails. Next rotate the bar so that the pressed bolt is above the fuel tank and the threads are facing toward the rear of the truck. Now it can be pushed forward on the frame toward the front bed crossmember, on the higher part of the frame. It is difficult to rotate the bar on the higher frame, so be sure to rotate it before moving it forward. The rear crossmember installs between the double bed crossmembers. Push the bar in lying horizontal until centered and then rotate it to vertical, making sure that the threaded holes are positioned at the bottom of the bar. Position this bar right behind the bed crossmember that is closest to the 4” hole in the truck bed. The holes in this bar are threaded to receive ½ inch bolts.

APPLICATION UPDATE:

The new fuel valve mounted on the rear of the fuel tank on 2004 and newer model trucks equipped with gas engines, will make it more difficult to install the Turnover Ball™ center section. This fuel valve can be easily removed and replaced to ease installation. Please follow the following instructions:

Step 1:
Locate the fuel valve.

Step 2:
Disengage the locking pin.

Step 3:
Slide fuel valve from bracket.

Step 4:
Install Turnover Ball Center Section.

Step 5: Replace fuel valve to bracket on fuel tank.

***STEP FIVE** - INSTALL THE CENTER SECTION*

Raise the center section into position with the socket top pointed upward, and the latch pin to the driver’s side. Raise the center section over the differential, and angle it up over the exhaust pipe until it clears the fuel tank, and then move it back over the fuel tank as shown. There are fuel lines and wiring coming out of the top of the fuel tank, so you must avoid damaging those by holding the center section tightly against the bottom of the truck bed floor while moving it. Insert the socket top into the 4-inch hole in the floor. If you are using an overhead lifting device, attach it to the latch pin, and apply a small amount of upward pressure to the truck bed floor, to make bolting easier. Move the front bar against the center section sliding the pressed bolt into the matching hole in the center section. Install two of the 2 1/4” x 1/2” bolts through the bar and into the center section while placing a flat washer, lock washer, and nut on the bolt threads. Next thread four 1 1/2” bolts with flat and lock washers through the center section and into the rear bar. Shift the bar sideways until it is centered across the frame. Also twist the assembly so that it is parallel with the bed crossmembers and tighten all center section fasteners at this time.

***STEP SIX** - INSTALL SIDEPLATES*

Next install the sideplates. The driver’s sideplate is shown, with the bent flange to the front, and the large holes to the rear. Attach the two pieces of the sideplate together with ½” carriage bolts. The carriage bolts should be inserted into the square holes from the backside of the sideplates and fastened using a lock washer and nut on each bolt. This can be completed before installing on the frame rail.

Attach the flange on the sideplate to the front bar by placing a 1/2” x 2 1/4” bolt through the bar and sideplate; secure with a flat washer, lock washer and nut.